Heyco® Solar Power Components Used in Typical Grid-Tied PV System

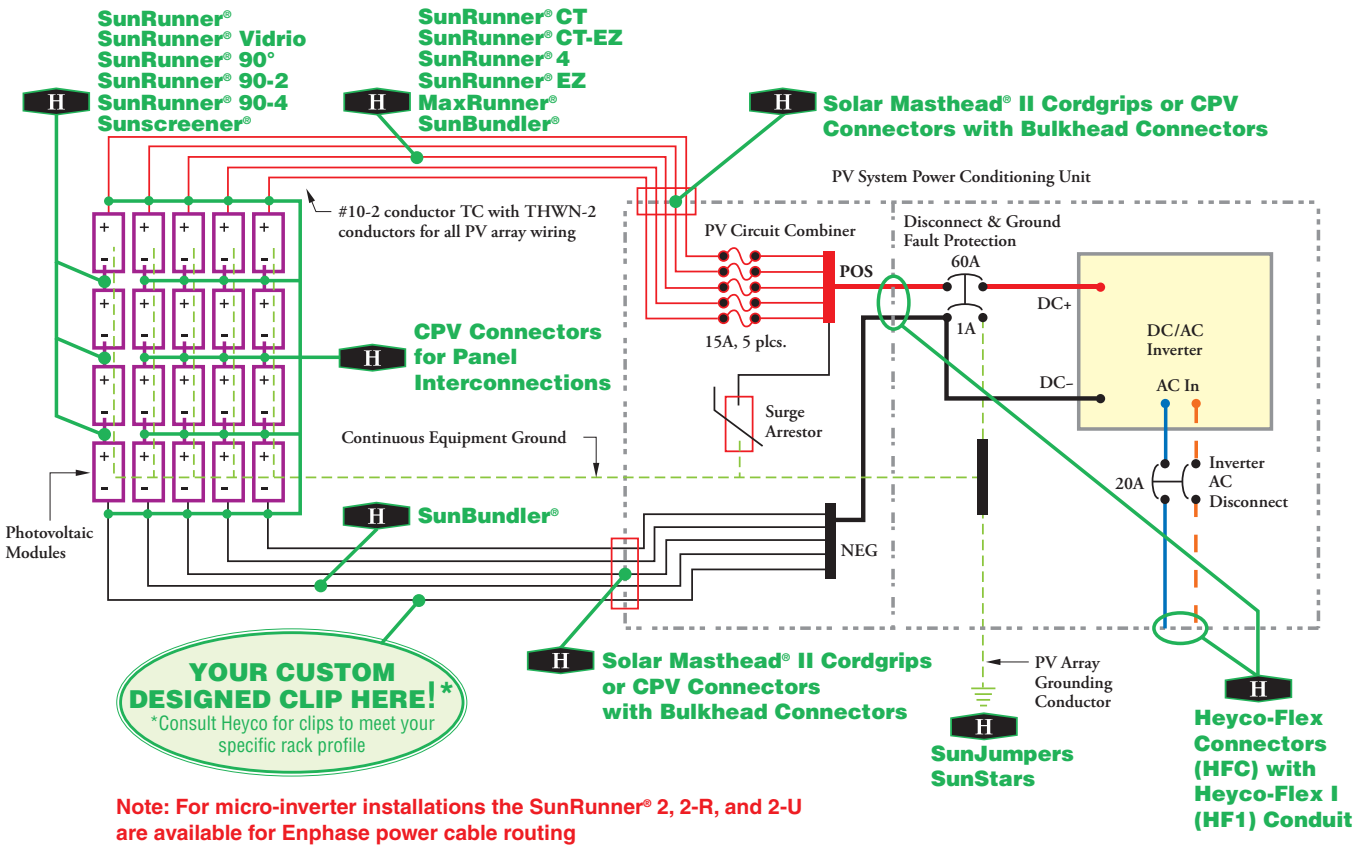

Note: For micro-inverter installations the SunRunner® 2, 2-R, and 2-U are available for Enphase power cable routing